FIGURE 6b

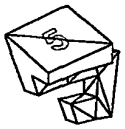
Fig.6b.5

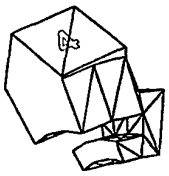
Fig.6b.4

Fig.6b.3

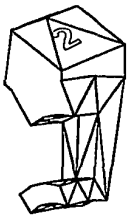
Fig.6b.2

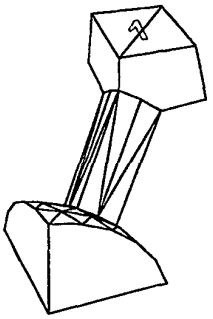
Fig.6b.1

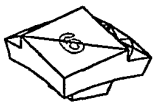
Fig.6b.6

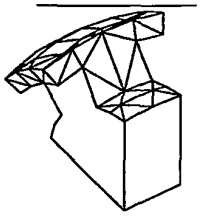
Fig.6b.7

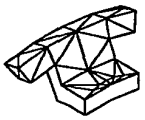
Fig.6b.8

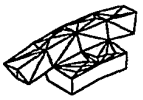
Fig.6b.9

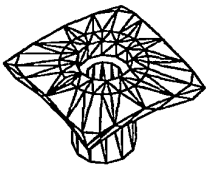
Fig.6b.10

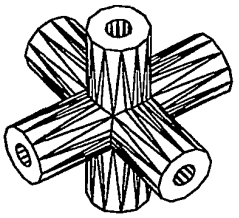
Fig.6b.11

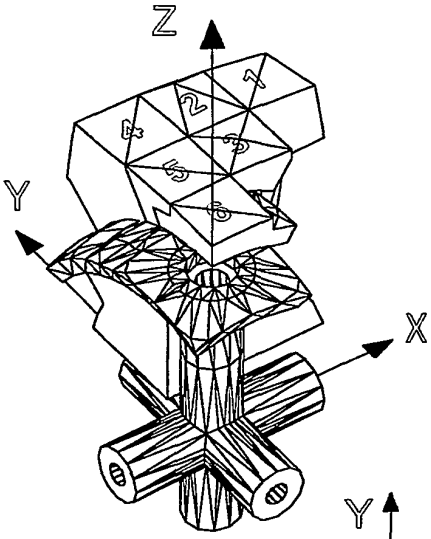

Fig.6b.12

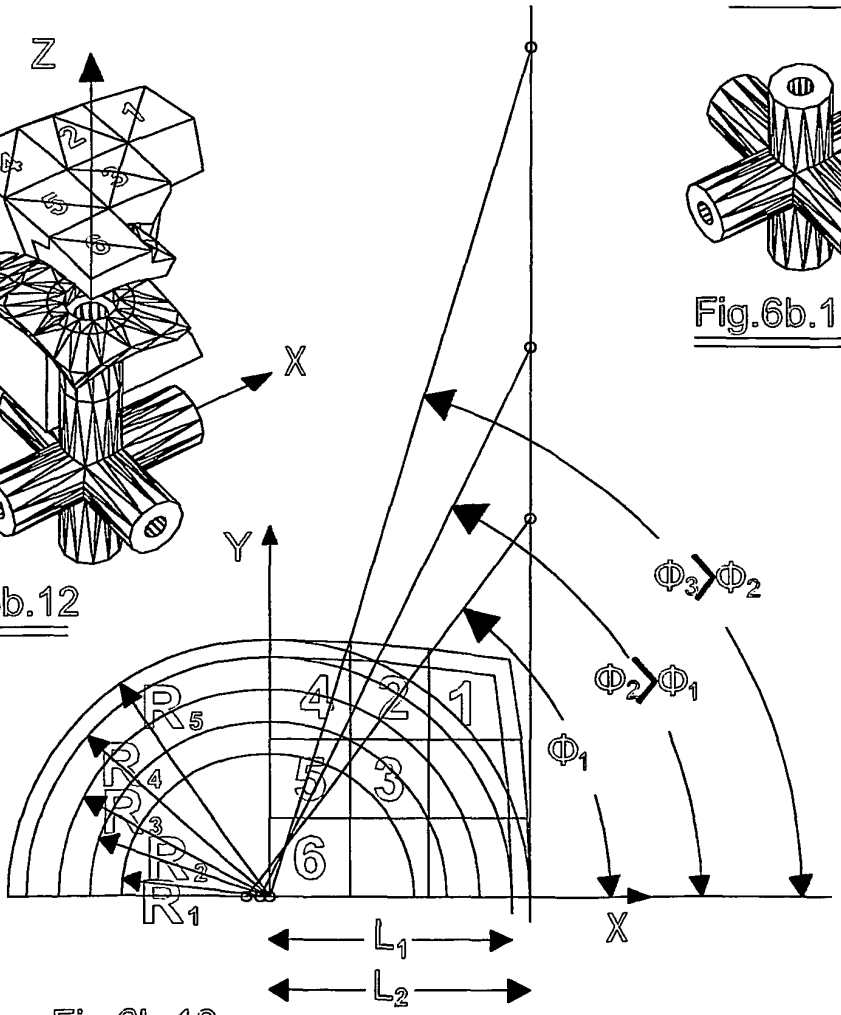

Fig.6b.13